Suffolk Construction Company, Inc.
65 Allerton Street
Boston, Massachusetts 02119
P: (617) 445-3500
F: (617) 541-2128

Project: 226052 DFCI-BIDMC New Cancer Hospital - 1 Joslin Place - Construction
1 Joslin Place
Boston, Massachusetts 02215

RFI #0-PB-124: LBE Column Cap Plate Weld Requirements – Detail 1/S0.06

Revision	0	**Status**	Closed on 03/16/26
To	Jensen Ying (Payette Associates, Inc. (BOSTON)) Emilio Cardarelli (PAYETTE) Hyunsuk Yun (Payette Associates, Inc. (BOSTON)) Jeff Abramson (Payette Associates, Inc. (BOSTON)) *(Response Required)* Jessica Hoctor (Payette Associates, Inc. (BOSTON)) Mollica Manandhar (Payette Associates, Inc. (BOSTON))	**From**	Devin DiManno (Suffolk Construction) 65 Allerton St. Boston, Massachusetts 02119
Date Initiated	Feb 26, 2026	**Due Date**	Mar 5, 2026
Location		**Project Stage**	Bidding
Cost Impact		**Schedule Impact**	
Spec Section	051200 - STRUCTURAL STEEL FRAMING	**Cost Code**	
Drawing Number		**Reference**	
Linked Drawings			
Received From	Devin DiManno (Suffolk Construction)	**Sub Job**	
Copies To	Jeff Abramson (Payette Associates, Inc. (BOSTON)), Stephen Beck (Suffolk Construction), Craig Blanchet (Lemessurier Consultants, Inc. (BOSTON)), Emilio Cardarelli (PAYETTE), Joy Clark (Leggat McCall Properties LLC), Nathan Crowley (Suffolk Construction), Devin DiManno (Suffolk Construction), Conor Driscoll (Suffolk Construction), Kevin Griffin (Leggat McCall Properties LLC), Jessica Hoctor (Payette Associates, Inc. (BOSTON)), Emily Jacobsen (Lemessurier Consultants, Inc. (BOSTON)), Avinash Jadhav (Lemessurier Consultants, Inc. (BOSTON)), Silas Mackey (Suffolk Construction), Mithila Madhavan (Lemessurier Consultants, Inc. (BOSTON)), Mollica Manandhar (Payette Associates, Inc. (BOSTON)), Rob Morsi (Suffolk Construction), Kaitlyn Palmer (Lemessurier Consultants, Inc. (BOSTON)), Joel Perry (Suffolk Construction), Kyle Reilly (Suffolk Construction), Ben Stanton (Leggat McCall Properties LLC), Dan Sullivan (Leggat McCall Properties LLC), Jake Tucci (Leggat McCall Properties LLC), Bob Walsh (Leggat McCall Properties LLC), Benjamin Watkins (Suffolk Construction), Jensen Ying (Payette Associates, Inc. (BOSTON)), Hyunsuk Yun (Payette Associates, Inc. (BOSTON))		

ADDITIONAL FIELDS

Required Reviewers		**Urgency**	High

Activity

Question

Question from Devin DiManno Suffolk Construction *on Thursday, Feb 26, 2026 at 02:28 PM EST*

Detail 1/S0.06 indicates the configuration for the LBE column cap plate connection at each applicable garage level. However, the detail does not identify the required weld sizes (fillet size, length, or type) between the LBE column and the cap plate. Weld size is required for both competitive bid purposes and fabrication detailing. Please provide the required weld sizes for these locations

Attachments
RFI 0-PB-124 - LBE Column Cap Plate Weld Requirements – Detail 1 - S0.06.pdf

Official Response

Response from JP Connors Suffolk Construction *on Monday, Mar 16, 2026 at 10:04 AM EDT*

LeM (3/6/2026) Response:

For bidding purposes only, at the floor levels below elevation 35':
1. At the primary lateral system columns (as defined below), provide allowance to develop an average of 50% of the axial tensile yield capacity of the columns.
2. At all other columns, provide allowance to develop an average of 20% of the axial tensile yield capacity of the columns.

Primary lateral system columns include: H-4.1, J.1-4.1, K-4.1, H-5, J.1-5, K-5, C-4.1, C-5, C-7, F.7-2, H.3-2, J.2-2
Final design forces will be provided in an upcoming issuance.

Official Response

Response from Jensen Ying Payette Associates, Inc. (BOSTON) *on Monday, Mar 9, 2026 at 02:08 PM EDT*

Please see attached for LeM's response.

Attachments
RFI 0-PB-124 - LBE Column Cap Plate Weld Requirements – Detail 1 - S0.06 - LeM.pdf

All Replies

Response from JP Connors Suffolk Construction *on Monday, Mar 16, 2026 at 10:04 AM EDT*

LeM (3/6/2026) Response:

For bidding purposes only, at the floor levels below elevation 35':
1. At the primary lateral system columns (as defined below), provide allowance to develop an average of 50% of the axial tensile yield capacity of the columns.
2. At all other columns, provide allowance to develop an average of 20% of the axial tensile yield capacity of the columns.

Primary lateral system columns include: H-4.1, J.1-4.1, K-4.1, H-5, J.1-5, K-5, C-4.1, C-5, C-7, F.7-2, H.3-2, J.2-2
Final design forces will be provided in an upcoming issuance.

Response from Jensen Ying Payette Associates, Inc. (BOSTON) *on Monday, Mar 9, 2026 at 02:08 PM EDT*

Please see attached for LeM's response.

Attachments
RFI 0-PB-124 - LBE Column Cap Plate Weld Requirements – Detail 1 - S0.06 - LeM.pdf

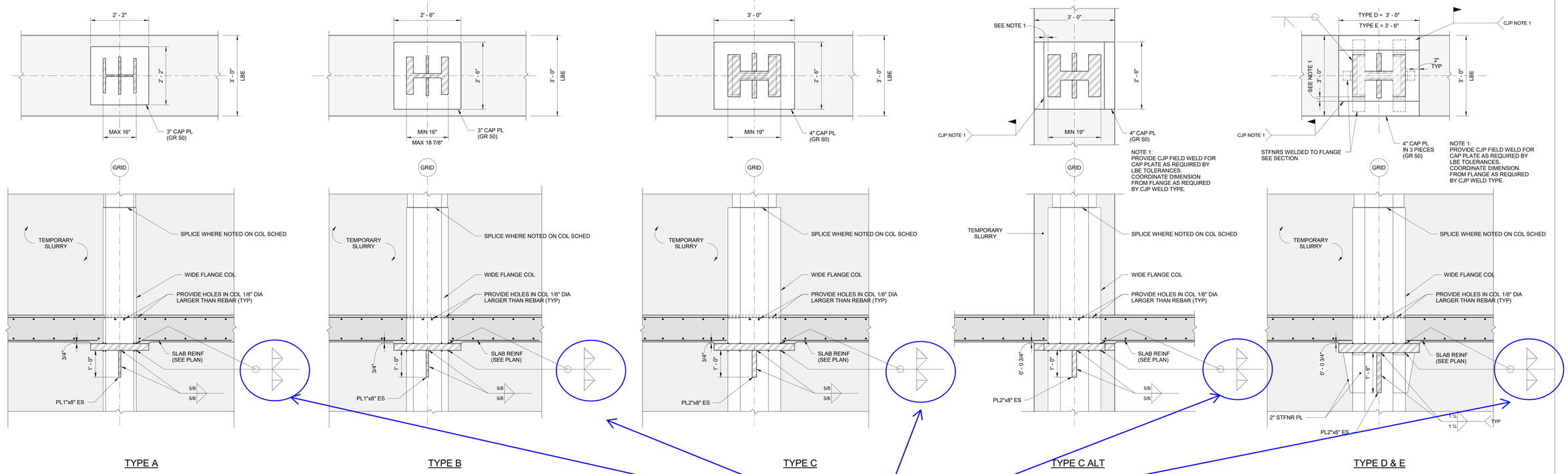

TYPE A | TYPE B | TYPE C | TYPE C ALT | TYPE D & E

NOTES:
1. PROVIDE WELDING SEQUENCE WITH SHOP DRAWINGS FOR REVIEW.
2. CP-X* INDICATES CAP-PLATE THAT MAY BE TRIMMED IN FIELD TO PROVIDE CLEARANCE AS REQUIRED, SUBMIT FIELD TRIMMED DIMENSION FOR REVIEW.
4. CP-X** INDICATES CAP-PLATE THICKNESS TO MATCH TRUSS CHORD FLANGE THICKNESS.
3. PROVIDE TYPE C ALT WHERE COLUMN WEB IS NOT PARALLEL TO THE LONG DIRECTION OF THE LBE.

1 CAP PLATE DETAILS

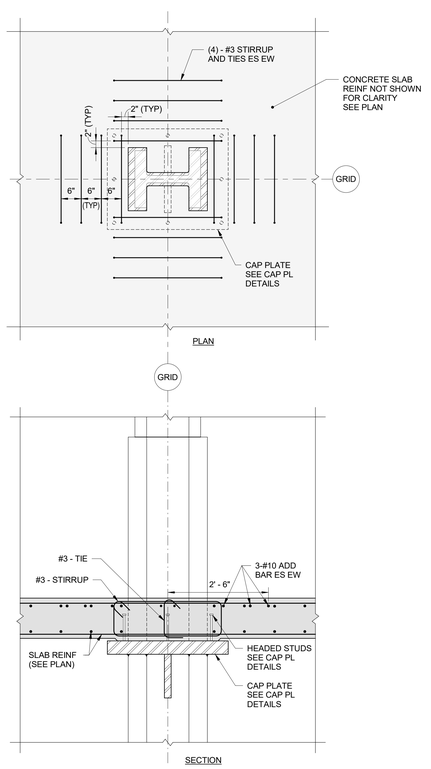

2 CAP PLATE ANCHOR REINFORCING DETAIL

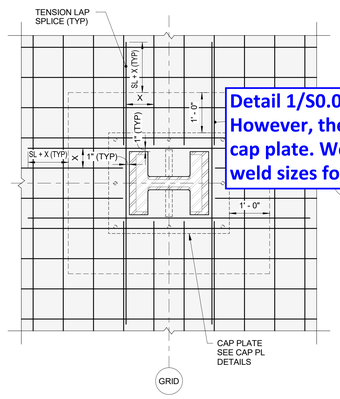

PLAN OF BOTTOM REINFORCING AT CAP PLATE

Detail 1/S0.06 indicates the configuration for the LBE column cap plate connection at each applicable garage level. However, the detail does not identify the required weld sizes (fillet size, length, or type) between the LBE column and the cap plate. Weld size is required for both competitive bid purposes and fabrication detailing. Please provide the required weld sizes for these locations

MINIMUM SPLICE AND DEVELOPMENT LENGTH SCHEDULE FOR REINFORCING BARS

$f_{'c}$ = 4000 PSI NORMALWEIGHT CONCRETE — Fy=60000 PSI UNCOATED BARS

BAR SIZE	LAP CLASS	TENSION LAP SPLICE LENGTHS: TOP BARS	TENSION LAP SPLICE LENGTHS: OTHER BARS	COMPRESSION DEVELOPMENT LENGTH	STANDARD HOOK DEVELOPMENT LENGTH	COMPRESSION LAP SPLICE LENGTH
#6	A	37"	56"	29"	43"	15"
	B	49"	73"	37"	56"	
#7	A	54"	81"	42"	63"	17"
	B	71"	106"	54"	81"	
#8	A	62"	93"	48"	72"	19"
	B	81"	121"	62"	93"	
#9	A	70"	105"	54"	81"	22"
	B	91"	136"	70"	105"	
#10	A	79"	118"	61"	91"	25"
	B	102"	153"	79"	118"	
#11	A	87"	131"	67"	101"	27"
	B	114"	170"	87"	131"	
#14	N/A	*105"*	*157"*	*81"*	*121"*	33"
#18	N/A	*140"*	*209"*	*108"*	*161"*	43"

BAR SIZE	LAP CLASS	DEVELOPMENT LENGTH	HOOK DEVELOPMENT LENGTH	COMPRESSION LAP SPLICE LENGTH
#6	A	20"	23"	
	B			
#7	A	25"	27"	
	B			
#8	A	30"	30"	
	B			
#9	A	36"	34"	
	B			
#10	A	43"	39"	
	B			
#11	A	51"	43"	
	B			
#14	N/A	66"	N/A	
#18	N/A	102"	N/A	

NOTES:

1. TABLE VALUES ARE BASED ON CONCRETE COMPRESSIVE STRENGTH $f'c$ = 4,000 PSI AND REINFORCING STEEL YIELD STRENGTH fy = 60,000 PSI. FOR OTHER VALUES OF $f'c$ AND fy THE FOLLOWING SHALL APPLY.

2a. MULTIPLY THE TENSION LAP SPLICE LENGTHS BY THE FOLLOWING VALUES:

f'c (PSI)	MULTIPLIER	fy (PSI)	MULTIPLIER
4,000	1.00	60,000	1.00
5,000	0.89	80,000	1.53
6,000	0.82		
7,000	0.76		
8,000	0.71		
9,000	0.67		
≥10,000	0.63		

2b. MULTIPLY THE STANDARD HOOK DEVELOPMENT LENGTHS BY THE FOLLOWING VALUES:

f'c (PSI)	MULTIPLIER	fy (PSI)	MULTIPLIER
4,000	1.00	60,000	1.00
5,000	0.96	80,000	1.33
6,000	0.94		
7,000	0.87		
8,000	0.82		
9,000	0.77		
10,000	0.73		

3. MULTIPLY THE COMPRESSION DEVELOPMENT LENGTHS BY THE FOLLOWING VALUES:

fy (PSI)	MULTIPLIER
60,000	1.00
80,000	1.33

4. MULTIPLY THE COMPRESSION LAP SPLICE LENGTHS BY THE FOLLOWING VALUES:

fy (PSI)	MULTIPLIER
60,000	1.00
80,000	1.33

5. COMPRESSION LAP SPLICES ARE NOT ALLOWED FOR #14 AND #18 BARS.
6. HOOK DEVELOPMENT LENGTH VALUES TO BE MULTIPLIED BY 1.2 FOR EPOXY COATED BARS.
7. TOP BARS ARE DEFINED AS HORIZONTAL BARS WITH MORE THAN 12" OF CONCRETE CAST IN THE MEMBER BELOW THE REINFORCEMENT. WALL REINFORCEMENT IS CLASSIFIED AS OTHER BARS.
8. FOR LIGHTWEIGHT AGGREGATE CONCRETE MULTIPLY THE VALUES ABOVE BY 1.3 OR WHERE SPLITTING TENSILE STRENGTH (fct) IS SPECIFIED, MULTIPLY BY $6.7\sqrt{f'c}/fct \geq 1.0$.
9. DEVELOPMENT LENGTHS ARE EQUAL TO THE CLASS A SPLICE LENGTHS GIVEN IN THE TABLES. DEVELOPMENT LENGTHS FOR EPOXY COATED BARS AND LIGHTWEIGHT CONCRETE SHALL BE MULTIPLIED BY THE APPROPRIATE FACTORS.
10. SPLICE LENGTHS ARE EQUAL TO THE CLASS B LENGTHS GIVEN IN THE TABLES EXCEPT CLASS A SPLICE LENGTHS MAY BE USED WHERE THERE IS EXCESS REINFORCEMENT AT THE SPLICE AS GIVEN IN THE EXCESS REINFORCEMENT SPLICE SCHEDULE AS DETERMINED BY THE ENGINEER. SPLICE LENGTHS FOR EPOXY COATED BARS AND LIGHTWEIGHT CONCRETE SHALL BE MULTIPLIED BY THE APPROPRIATE FACTORS.
11. LAP SPLICES OF #14 AND #18 BARS ARE NOT PERMITTED. VALUES GIVEN ARE DEVELOPMENT LENGTHS ONLY.
12. LAP SPLICES ARE NOT PERMITTED IN TENSION TIE MEMBERS. USE MECHANICAL OR WELDED SPLICES PER ACI 12.15.5.
13. ALL CORE WALL REINFORCEMENT EXCEPT BOUNDARY #14 BARS TO BE SPLICED 1.25 x CLASS B TENSION LAP SPLICE.

CATEGORY

STRUCTURAL ELEMENT	CONCRETE COVER	CATEGORY ACCORDING TO CENTER-TO-CENTER BAR SPACING: < 2db	≥ 2db	< 3db	≥ 3db
BEAMS AND COLUMNS	< db	CASE 2	CASE 2	NA	NA
	≥ db	CASE 2	CASE 1	NA	NA
				CASE 2	CASE 2
				CASE 2	CASE 1

EPOXY COATED BARS

INCREASE SPLICE LENGTHS GIVEN IN SCHEDULE ABOVE BY THE FOLLOWING FACTORS:

BAR COVER AND SPACING	TOP BARS	OTHER BARS
COVER < 3db OR C-C < 6db	1.70	1.50
COVER ≥ 3db AND C-C ≥ 7db	1.56	1.20

CE SCHEDULE

* RATIO OF REINFORCEMENT: As PROVIDED / As REQUIRED	MAXIMUM PERCENT OF As SPLICED WITHIN REQUIRED LAP LENGTH: 50%	100%
≥ 2	CLASS A	CLASS B
< 2	CLASS B	CLASS B

* RATIO OF AREA OF REINFORCEMENT PROVIDED TO AREA OF REINFORCEMENT REQUIRED BY ANALYSIS AT SPLICE LOCATIONS.

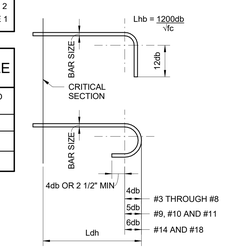

3 REINFORCING SPLICE AND DEVELOPMENT LENGTHS

Architect
Payette Associates Inc.
290 Congress Street, Fifth Floor
Boston, MA 02210-1005
Tel: 617-895-1000
Fax: 617-895-1002

Civil and Transportation Engineer
Vanasse Hangen Brustlin, Inc.
99 High Street, 13th Flr.
Boston, MA 02110
Tel: 617-607-2971
www.vhb.com

Landscape Architect
Michael Van Valkenburgh Associates, Inc.
231 Concord Avenue
Cambridge, MA 02138
Tel: 617-864-2076
www.mvvainc.com

Structural Engineer
LeMessurier
1380 Soldiers Field Road
Boston, MA 02135
Tel: 617-868-1200
www.lemessurier.com

Structural Engineer (Dana-Mayer)
Simon Design Engineering
49 Walnut Park, Bldg. #2
Wellesley, MA 02481
Tel: 781-237-2226
www.sde-us.com

MEPFP Tel/Data Engineer and Lighting
Bard, Rao + Athanas Consulting Engineers
10 Guest Street, 4th Flr.
Boston, MA 02135
Tel: 617-254-0016
www.brplusa.com

Vertical Transportation and Materials Management
St. Onge
1400 Williams Road
York, PA 17402
Tel: 717-840-8181
www.stonge.com

Life Safety Consultant
Code Red Consultants
123 Turnpike Road, Suite 320
Southborough, MA 01772
Tel: 617-500-7633
www.coderedconsultants.com

Medical Equipment
C/W Design Group
57 Bedford Street, Suite 207
Lexington, MA 02420
Tel: 781-274-7275
www.cwdesigngroup.com

Hardware Consultant
Allegion
77 Wexford Street
Needham Heights, MA 02494
Tel: 781-453-5300
www.allegion.com

Wind/Air Entrainment Consultant
RWDI
600 Southgate Drive
Guelph, Ontario, N1G 4P6
519-823-1311
https://rwdi.com

Building Facade Consultant
Studio NYL 129
Kingston Street, Ground Floor
Boston, MA 02111
Tel: 303-558-3145
www.studionyl.com

Building Enclosure Consultant
Simpson Gumpertz & Heger
480 Totten Pond Road
Waltham, MA 02451
Tel: 781-907-9000
www.sgh.com

Parking Consultant
Walker Consultants
1075 Main St., Suite 410
Waltham, MA 02451
Tel: 617-350-5040
www.walkerconsultants.com

Acoustics Engineer
Acentech
33 Moulton Street
Cambridge, MA 02138
Tel: 617-499-8031
www.acentech.com

Food Services Consultant
Kaizen
1525 Cornwall Road
Unit 14
Oakville, ON L6J 0B2
Tel: 905-338-3222
www.kaizenfood.com

Radiation Shielding Consultant
Nelco/Trapani
2 Burlington Woods Drive, Suite 300
Burlington, MA 01803
Tel: 781-331-0429
www.nelcoworldwide.com

RF Shielding Consultant
PDC Facilities, Inc.
700 Walnut Ridge Drive
Hartland, WI 53029
Tel: 262-367-7944
www.pdcbiz.com

PAYETTE

Issues

Number	Date	Description
00	10-30-25	FACADE AND INFRASTRUCTURE PACKAGE
01	02-05-26	FACADE AND INFRASTRUCTURE PACKAGE ADDENDUM 2

Revisions

Number	Date	Description

NOT FOR CONSTRUCTION

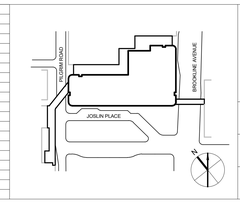

Dana-Farber Cancer Institute — Beth Israel Lahey Health / Beth Israel Deaconess Medical Center

FUTURE CANCER HOSPITAL
1 JOSLIN PLACE, BOSTON MA 02115

TYPICAL DETAILS

Drawing Scale: As indicated
Project Number: 17000.00
Date Issued: 10/30/2025

S0.06

©2025 Payette Associates Inc.

Autodesk Docs://DFCI_Cancer_Hosp/STR_LAM_DFCI_Cancer-Hospital_23-V200_R24.rvt
2/4/2026 8:00:38 PM

Suffolk Construction Company, Inc.
65 Allerton Street
Boston, Massachusetts 02119
P: (617) 445-3500
F: (617) 541-2128

Project: 226052 DFCI-BIDMC New Cancer Hospital - 1 Joslin Place - Construction
1 Joslin Place
Boston, Massachusetts 02215

RFI #0-PB-124: LBE Column Cap Plate Weld Requirements – Detail 1/S0.06

Revision	0	**Status**	Open
To	Emilio Cardarelli (PAYETTE) Hyunsuk Yun (Payette Associates, Inc. (BOSTON)) Jeff Abramson (Payette Associates, Inc. (BOSTON)) *(Response Required)* Jensen Ying (Payette Associates, Inc. (BOSTON)) Jessica Hoctor (Payette Associates, Inc. (BOSTON)) Mollica Manandhar (Payette Associates, Inc. (BOSTON))	**From**	Devin DiManno (Suffolk Construction) 65 Allerton St. Boston, Massachusetts 02119
Date Initiated	Feb 26, 2026	**Due Date**	Mar 5, 2026
Location		**Project Stage**	Bidding
Cost Impact		**Schedule Impact**	
Spec Section	051200 - STRUCTURAL STEEL FRAMING	**Cost Code**	
Drawing Number		**Reference**	
Linked Drawings			
Received From	Devin DiManno (Suffolk Construction)	**Sub Job**	
Copies To	Jeff Abramson (Payette Associates, Inc. (BOSTON)), Stephen Beck (Suffolk Construction), Craig Blanchet (Lemessurier Consultants, Inc. (BOSTON)), Emilio Cardarelli (PAYETTE), Joy Clark (Leggat McCall Properties LLC), Nathan Crowley (Suffolk Construction), Devin DiManno (Suffolk Construction), Conor Driscoll (Suffolk Construction), Kevin Griffin (Leggat McCall Properties LLC), Jessica Hoctor (Payette Associates, Inc. (BOSTON)), Emily Jacobsen (Lemessurier Consultants, Inc. (BOSTON)), Avinash Jadhav (Lemessurier Consultants, Inc. (BOSTON)), Silas Mackey (Suffolk Construction), Mithila Madhavan (Lemessurier Consultants, Inc. (BOSTON)), Mollica Manandhar (Payette Associates, Inc. (BOSTON)), Rob Morsi (Suffolk Construction), Kaitlyn Palmer (Lemessurier Consultants, Inc. (BOSTON)), Joel Perry (Suffolk Construction), Kyle Reilly (Suffolk Construction), Ben Stanton (Leggat McCall Properties LLC), Dan Sullivan (Leggat McCall Properties LLC), Jake Tucci (Leggat McCall Properties LLC), Bob Walsh (Leggat McCall Properties LLC), Benjamin Watkins (Suffolk Construction), Jensen Ying (Payette Associates, Inc. (BOSTON)), Hyunsuk Yun (Payette Associates, Inc. (BOSTON))		

ADDITIONAL FIELDS

Required Reviewers		**Urgency**	High

Activity

Question

Question from Devin DiManno Suffolk Construction *on Thursday, Feb 26, 2026 at 02:28 PM EST*

Detail 1/S0.06 indicates the configuration for the LBE column cap plate connection at each applicable garage level. However, the detail does not identify the required weld sizes (fillet size, length, or type) between the LBE column and the cap plate. Weld size is required for both competitive bid purposes ~~and fabrication detailing. Please provide the required weld sizes for these locations.~~

Attachments
RFI 0-PB-124 - LBE Column Cap Plate Weld Requirements – Detail 1 - S0.06.pdf

Awaiting an Official Response

LeM (3/6/2026):

For bidding purposes only, at the floor levels below elevation 35':
1. At the primary lateral system columns (as defined below), provide allowance to develop an average of 50% of the axial tensile yield capacity of the columns.
2. At all other columns, provide allowance to develop an average of 20% of the axial tensile yield capacity of the columns.

Primary lateral system columns include: H-4.1, J.1-4.1, K-4.1, H-5, J.1-5, K-5, C-4.1, C-5, C-7, F.7-2, H.3-2, J.2-2

Final design forces will be provided in an upcoming issuance.